# EGPL-G203

## M.2 2280 to dual isolated GbE LAN horizontal module

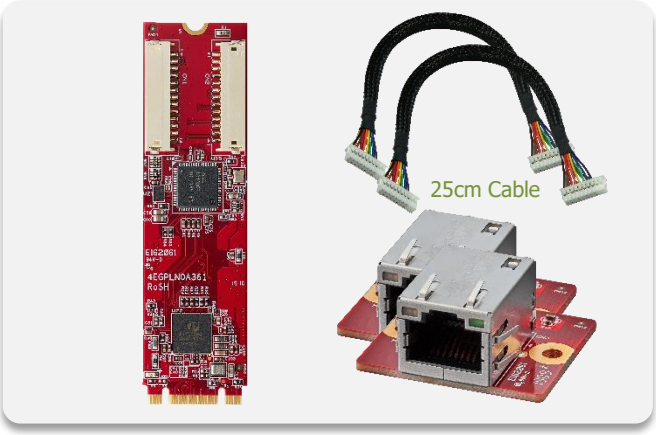


## Features

- Dual isolated GbE LAN ports
- Complies with EN61000-4-5 2kV surge protection
- Complies with IEC 60950-1:2005 + A1: 2009 + A2:2013 2kV HiPOT protection
- Complies with EN61000-4-2 (ESD) Air-15kV, Contact-8kV
- Flexible daughter board with cable to fit into different system
- Industrial temperature -40 ºC to 85 ºC
- 30μ" golden finger, 3-year warranty
- Industrial design, manufactured in Innodisk Taiwan

## Mechanical Drawing

### Main Board

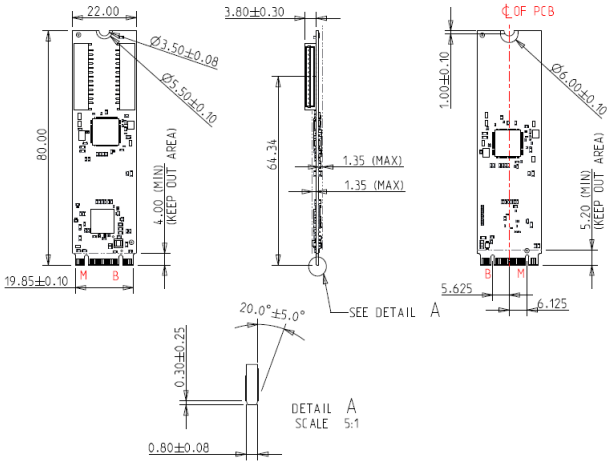


### Daughter Board

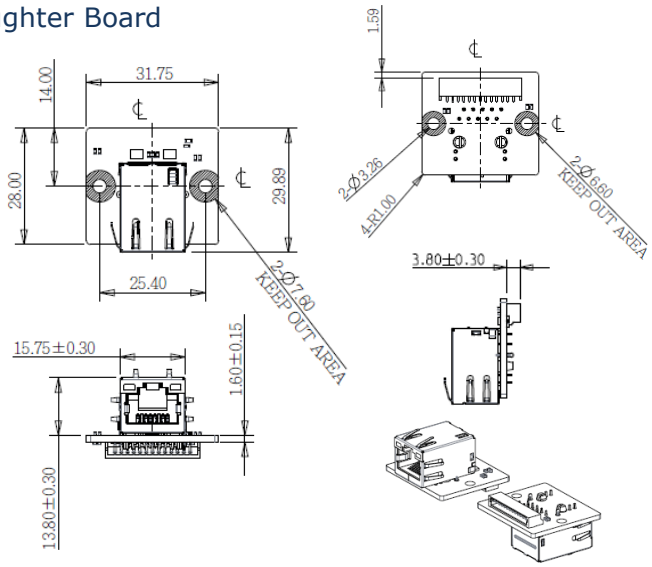


## Specifications

| | |
|---|---|
| Form-Factor | M.2 2280 B-M |
| Input I/F | PCI Express 2.1 x 1 |
| Output I/F | Dual GbE LAN |
| Output Connector | RJ45 x 2 |
| TDP | 2.9W (3.3V x 883mA) |
| Dimension (WxLxH) | Main board: 22 x 80 x 5.95 mm<br>Daughter board: 31.75 x 28 x 19.2mm |
| Temperature | Operation: STD: 0˚C ~ +70˚C. W/T: -40˚C ~ +85˚C<br>Storage: -55˚C ~ +95˚C |
| Environment | Vibration: 5G @7~2000Hz, Shock: 50G @ 0.5ms |
| Notes | Please download driver from MyInnodisk website.<br>Windows: XP(32bit), 7(32/64bit), 8/8.1(32/64 bit), 10(32/64bit)<br>Linux: kernel 2.4 series, 2.6.x and 3.x version. |

## Order information

**EGPL-G203-C1 (Terminal mounting hole, Standard Temp.)**
**EGPL-G203-W1 (Terminal mounting hole , Wide Temp.)**
M.2 2280 to dual isolated GbE LAN horizontal module


**Headquarters (Taiwan)**
5F., No.237, Sec. 1, Datong Rd., Xizhi Dist., New Taipei City 221, Taiwan

Tel: +886-2-7703-3000
Email: sales@innodisk.com

**Branch Offices:**
**USA**
usasales@innodisk.com
+1-510-770-9421
**Europe**
eusales@innodisk.com
+31-40-3045-400
**Japan**
jpsales@innodisk.com
+81-3-6667-0161
**China**
sales_cn@innodisk.com
+86-755-2167-3689

**www.innodisk.com**



© 2019 Innodisk Corporation. All right reserved. Specifications are subject to change without prior notice.



November 26, 2022