# SOM-6882

## 8th Generation Intel® Core™ Processor U-Series Celeron 4000 Series COM Express Compact Module Type 6

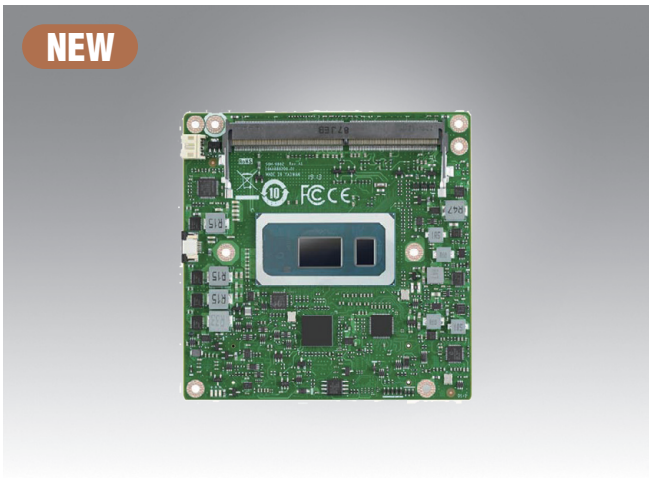


## Features

- 8th Generation Intel® Core™ Processor U-Series
- COM Express R3.0 Compact module Type 6 Pinout
- Dual channel DDR4 SODIMM, max. 64GB
- High speed I/Os: 4 USB3.2 gen2, 8 PCIe gen3 lanes and 2 SATAIII
- On board storage eMMC 32GB, TPM2.0 (Optional)
- Supports iManager, embedded software APIs and WISE-PaaS/DeviceOn

**Software APIs:** Watchdog, I²C, SMBus, H/W Monitor, GPIO, Brightness

Windows Embedded iManager WISE-PaaS/ DeviceOn

## Specifications

| | | | | | |
|---|---|---|---|---|---|
| Form Factor | Form Factor | COM Express Compact Module | | | |
| | Pin-out Type | COM Express R3.0 Type 6 compatible | | | |
| Processor System | CPU | i7-8665UE | i5-8365UE | i3-8145UE | 4305UE |
| | Base Frequency | 1.7 GHz | 1.6 GHz | 2.2 GHz | 2.0 GHz |
| | Max Single Core Turbo Frequency | 4.4 GHz | 4.1 GHz | 3.9 GHz | N/A |
| | Cores | 4 | 4 | 2 | 2 |
| | LLC | 8MB | 6MB | 4MB | 2MB |
| | CPU TDP | 15W | 15W | 15W | 15W |
| | BIOS | AMI UEFI 256Mbit | | | |
| Memory | Technology | DDR4 up to 2400 MT/s | | | |
| | Speed | 2400 MT/s | 2400 MT/s | 2400 MT/s | 2133 MT/s |
| | ECC Support | Non-ECC | | | |
| | Max. Capacity | up to 64GB | | | |
| | Socket | 2 260P SO-DIMM (Dual Channel) | | | |
| Graphics | Controller | Intel® UHD Graphics 620 | Intel® UHD Graphics 620 | Intel® UHD Graphics 620 | Intel® UHD Graphics 610 |
| | Max. Frequency | 1.15 GHz | 1.05 GHz | 1.0 GHz | 1.0 GHz |
| | Graphic Memory | Shared Memory | | | |
| | 3D/HW Acceleration | HW Encode: H.264/AVC, VP8, VP9, H.265/HEVC 8 bit, H.265/HEVC 10 Bit, MPEG2, MJPEG<br>HW Decode: H.264/AVC, VP8, VP9, VP9 10 Bit, H.265/HEVC 8 bit, H.265/HEVC 10 Bit, MPEG2, MJPEG, VC-1 | | | |
| Display | VGA | 1920 x 1200 @ 60Hz | | | |
| | LCD | LVDS dual channel: 1920 x 1200 @ 60Hz (option support eDP 4096 x 2304 @ 60Hz, 24bpp) | | | |
| | DDI | Up to 2 DDI ports support configurable HDMI/Display Port<br>HDMI: 4096 x 2160 @ 24Hz, DVI: 1920 x 1200 @ 60Hz, DP: 4096 x 2304 @ 60Hz | | | |
| | Multiple Display | Triple displays with each display combinations | | | |
| Expansion | PCI Express x16 (Gen3) | Not available | | | |
| | PCI Express x1 (Gen3) | Default: 4 PCIe x1 + 1 PCIe x4 (Support 8 lanes and up to 6 devices by optional) | | | |
| | LPC | Yes. Clock Freq.: 24MHz | | | |
| Serial Bus | SMBus | Yes | | | |
| | I2C Bus | Yes | | | |
| Ethernet | Gigabit | Intel I219LM controller ; Speed: 10/100/1000 Mbps | | | |
| I/O | SATA3.0 | Up to 3 Ports (6Gbps), 1 port is optional with PCIe x1 | | | |
| | USB3.2 (Gen2) | 4 Ports (10 Gbps) | | | |
| | USB2.0 | 8 Ports (480 Mbps) | | | |
| | Onboard Storage | 32GB eMMC | | | |
| | SPI Bus | Yes. For BIOS EEPROM | | | |
| | GPIO | 8-bit GPIO | | | |
| | Watchdog | 65536 level, 0 ~ 65535 sec | | | |
| | COM Port | 2 Ports (2-Wire) | | | |
| | TPM | TPM2.0 (Optional) | | | |
| | Smart Fan | 2 Ports: 1 port on COM module (Notice: the input voltage of fan is aligned to Vin); 1 port on carrier board | | | |
| Power | Type | ATX: Vin, VSB; AT: Vin | | | |
| | Supply Voltage | Vin: 8.5V ~ 20V; VSB: 4.75V ~ 5.25 V, RTC Battery: 2.0V ~ 3.3V | | | |
| | Power Consumption (Max.) | 59.721 W | | | |
| | Power Consumption (Idle) | 4.204 W | | | |
| Environment | Operating Temperature | Standard: 0 ~ 60 °C (32 ~ 140 °F)<br>Extended: -40 ~ 85 °C (-40 ~ 185 °F) | | | |
| | Storage Temperature | -40 ~ 85 °C (-40 ~ 185 °F) | | | |
| | Humidity | Operating: 40 °C @ 95% relative humidity, non-condensing<br>Storage: 60 °C @ 95%relative humidity, non-condensing | | | |
| | Vibration Resistance | 3.5 Grms | | | |
| Mechanical | Dimensions | 95 x 95 mm (3.74" x 3.74") | | | |



All product specifications are subject to change without notice.

Last updated: 29-Jul-2022

## Block Diagram

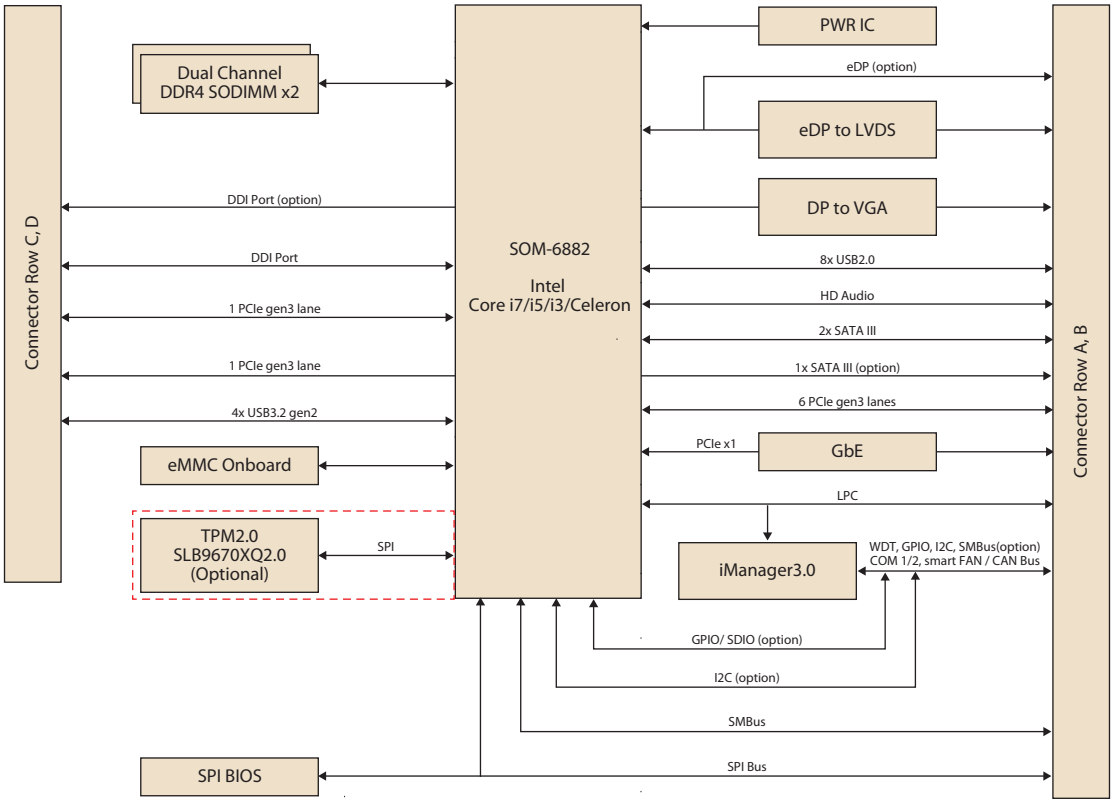


## Ordering Information

| P/N | CPU | Cores | Freq. (Base/Turbo) | CPU TDP | Onboard eMMC | LLC | LVDS/ eDP | Giga LAN | PCIe x1 | USB 2.0 | USB 3.2 (Gen2) | SATA 3.0 | LPC | Power | Thermal Solution | Operating Temperature |
|---|---|---|---|---|---|---|---|---|---|---|---|---|---|---|---|---|
| SOM-6882C7-S7A1 | CORE I7-8665UE | 4 | 1.7 / 4.4 | 15W | 32GB | 8MB | LVDS | 1 | 8 | 4 | 4 | 2 | YES | AT/ATX | Active | 0 ~ 60 °C |
| SOM-6882C7A-S7A1 | CORE I7-8665UE | 4 | 1.7 / 4.4 | 15W | 32GB | 8MB | eDP | 1 | 8 | 4 | 4 | 2 | YES | AT/ATX | Active | 0 ~ 60 °C |
| SOM-6882C5-S6A1 | CORE I5-8365UE | 4 | 1.6 / 4.1 | 15W | 32GB | 6MB | LVDS | 1 | 8 | 4 | 4 | 2 | YES | AT/ATX | Active | 0 ~ 60 °C |
| SOM-6882C3-U2A1 | CORE I3-8145UE | 2 | 2.2 / 3.9 | 15W | 32GB | 4MB | LVDS | 1 | 8 | 4 | 4 | 2 | YES | AT/ATX | Active | 0 ~ 60 °C |
| SOM-6882C3A-U2A1 | CORE I3-8145UE | 2 | 2.2 / 3.9 | 15W | 32GB | 4MB | eDP | 1 | 8 | 4 | 4 | 2 | YES | AT/ATX | Active | 0 ~ 60 °C |
| SOM-6882CR-U0A1 | CELERON 4305UE | 2 | 2.0 / N/A | 15W | 32GB | 2MB | LVDS | 1 | 8 | 4 | 4 | 2 | YES | AT/ATX | Active | 0 ~ 60 °C |
| SOM-6882C7X-S7A1 | CORE I7-8665UE | 4 | 1.7 / 4.4 | 15W | 32GB | 8MB | LVDS | 1 | 8 | 4 | 4 | 2 | YES | AT/ATX | Active | -40 ~ 85 °C |
| SOM-6882C5X-S6A1 | CORE I5-8365UE | 4 | 1.6 / 4.1 | 15W | 32GB | 6MB | LVDS | 1 | 8 | 4 | 4 | 2 | YES | AT/ATX | Active | -40 ~ 85 °C |
| SOM-6882C3X-U2A1 | CORE I3-8145UE | 2 | 2.2 / 3.9 | 15W | 32GB | 4MB | LVDS | 1 | 8 | 4 | 4 | 2 | YES | AT/ATX | Active | -40 ~ 85 °C |
| SOM-6882CRX-U0A1 | CELERON 4305UE | 2 | 2.0 / N/A | 15W | 32GB | 2MB | LVDS | 1 | 8 | 4 | 4 | 2 | YES | AT/ATX | Active | -40 ~ 85 °C |

Any other SKUs or combination has project-based support. Please contact sales team for details.

## Development Board

| Part No. | Description |
|---|---|
| SOM-DB5830-00A1 | COMe R3.0 Devel. Board Type6 Rev. A1 |
| SOM-DB5830A-00A1 | COMe R3.0 Devel. Board Type6 Rev.A1 w/eDP |

## Packing List

| Part No. | Description | Quantity |
|---|---|---|
| 1960093586N000 | Heatspreader | 1 |

## Optional Accessories

| Part No. | Description |
|---|---|
| 1960048819N001 | Semi-Cooler 95 x 95 x 33.5 mm with 12V Fan |

## Embedded OS

| OS | P/N | Description |
|---|---|---|
| Win10 | 20706WX9ES0066 | Win10 IoT 2019 Enterprise LTSC Entry |

# Reliable Embedded BIOS Solutions

## Custom BIOS services with long-term support

Advantech's high-quality embedded BIOS solutions deliver rapid execution and feature expert BIOS team support. These solutions feature multi-functional designs that ensure security and enable power/boot management. Advantech further provides 10+ years of BIOS version management, internal management, and longevity support for both hardware and BIOS — enhancing application efficiency, diversifying functionality, and optimizing performance.

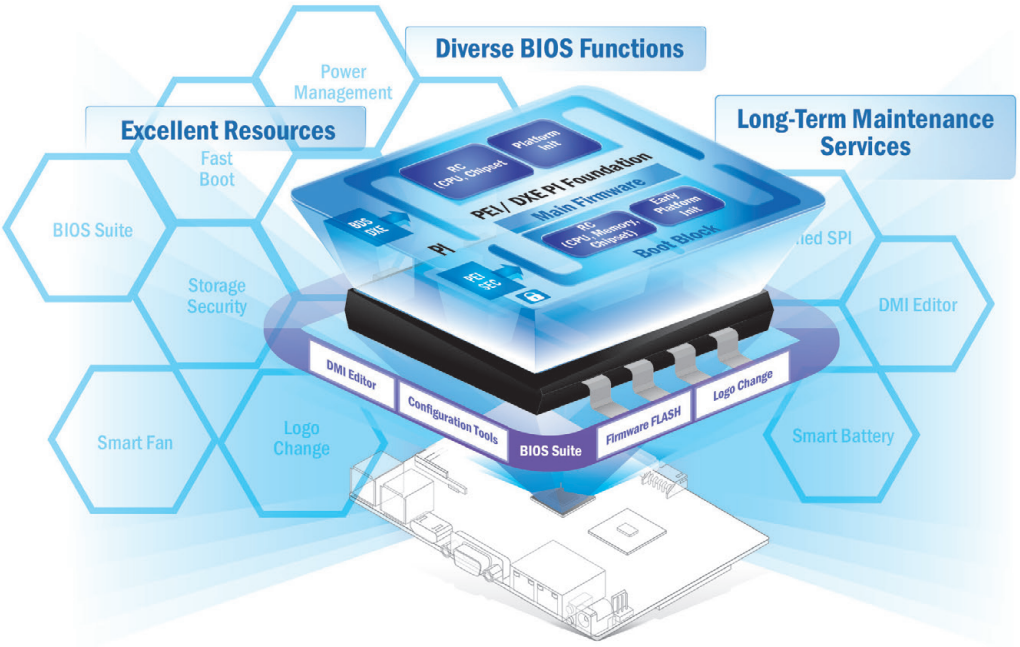


### Embedded BIOS Solution Advantages

**Sufficient Sources**

- Strong partnership with BIOS vendors
- 50+ engineers with extensive industrial BIOS experience

**Diverse BIOS Functions**

- Multi-layer security
- 3 second fast boot
- Power management
- BIOS suite utility

**Long-Term Maintenance Services**

- Platform longevity support
- 10-year BIOS version control
- BIOS remote backup

### Value-Added Customization Process

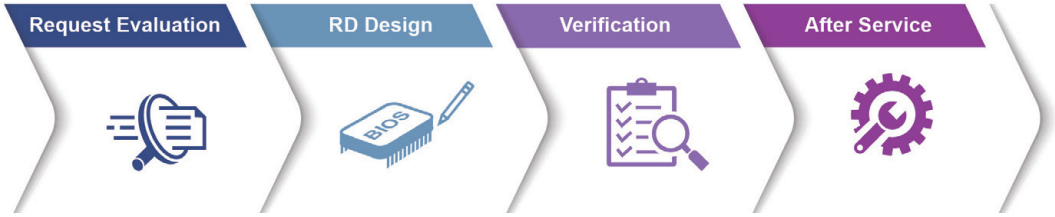

# WISE-DeviceOn

## Massive IoT Device Management Utility

IoT deployment and management typically involves numerous disparate devices installed on multiple sites. These devices require effective monitoring, managing, and tracking. Advantech's easy-to-use WISE-DeviceOn interface enables users to remotely monitor device health, troubleshoot problems, and send software/firmware updates over-the-air (OTA). In sum, DeviceOn empowers quick real-time responsiveness to emerging problems.

### Features

| Comprehensive Management | Remote Access | Efficient Operations |
|---|---|---|
| • Devices status<br>• Peripherals/firmware<br>• Open for extension | • Real-time monitoring<br>• Remote controls<br>• Troubleshooting | • Zero-touch on-boarding<br>• OTA updates<br>• Batch control |

### Product Highlights

**SOM-6883**
High-performance 11th Gen Intel® COMe Type 6 Module

**MIO-5375**
Compact 11th Gen Intel® Outdoor Focused 3.5" SBC

**EPC-B5587**
10th Gen Intel® Xeon® based Edge server

**EPC-R3220**
Arm based IoT Edge Gateway

# Edge AI Suite

## AI development for diverse application at the Edge

Increasing demand for AI inference/analytic capabilities at the Edge make AI training models, software development environments, and hardware configuration key factors in successful solution deployment. Advantech's Edge AI Suite helps users build AI demo devices quickly and choose optimal hardware solutions easily.

| 5x Performance Boost | All-in-one Installation | One Click AI Experience | Plug-and-play Environment | Discover Cost-effective Hardware |
|---|---|---|---|---|
| • Integrated Intel® OpenVINO™ technology<br>• Boost AI using Advantech hardware | • Build AI environment in under 5 minutes<br>• Ready-to-use configuration | • User friendly configuration guidance<br>• One-click Benchmark acquisition | • Easy access to 100+ AI inference extensions<br>• Software development package available | • Diverse CPU/RAM options<br>• Find hardware solutions for AI development |

# Embedded Linux Support and Design-in Services

## Hardware Certified Ubuntu and Yocto with Eco Partner Services

Linux is the most popular embedded OS for transportation, outdoor services, factory automation, and mission critical applications. Its open source and kernel reliability features ease security updates, and make it particularly adaptable to new AI and Edge computing technology. Advantech has cooperated with Canonical and other software partners to provide hardware certified Ubuntu image and Yocto BSP as Linux offerings. The Advantech, Embedded Linux, and Android Alliance (ELAA) delivers local software services and consultation.

### Features

**Certified OS and BSP**

- Platform compatibility tests
- Preloaded functional driver and software stacks

**Licensed Services**

- License authorized Canonical delivers 10-years of bug fixes and security updates
- In-house bundled service

**Numerous AI and Edge Resources**

- Containerized technology for service provision and deployment
- AI resources from Caffe, TensorFlow, and mxnet

**Local Partner Alliance**

- Embedded Linux and Android Alliance (ELAA)