MTU9A2

Intel Core Ultra Processors
COM Express® Mini

intel IoT Solutions Alliance

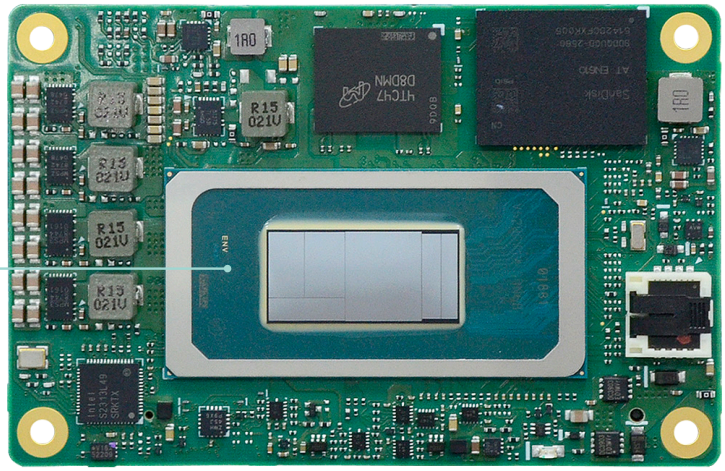

Top View

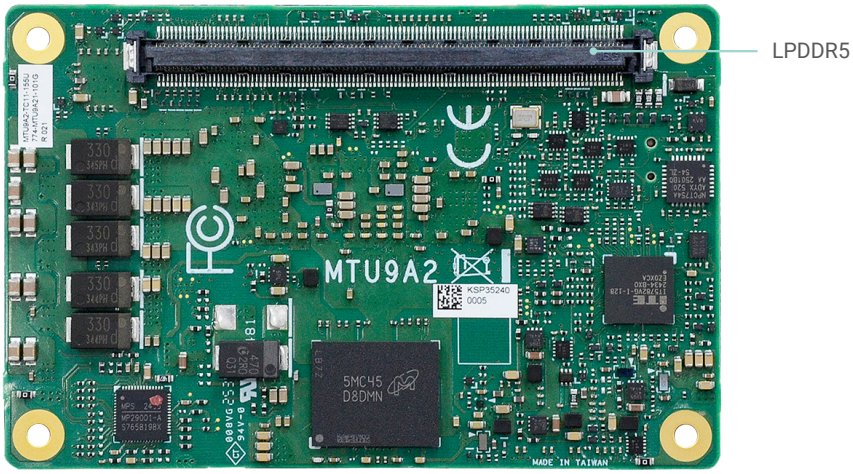

Bottom View

KEY FEATURES

LPDDR5

LPDDR5-7467 up to 32GB

4K High Resolution

Supports 4K/ 2K resolution

High Speed Ethernet

Supports 100M/1000M/2.5Gbps

Multiple Expansion

4 PCIe x1, 1 SMBus, 1 I^2C

Rich I/O

2 USB 3.2, 8 USB 2.0

BLOCK DIAGRAM

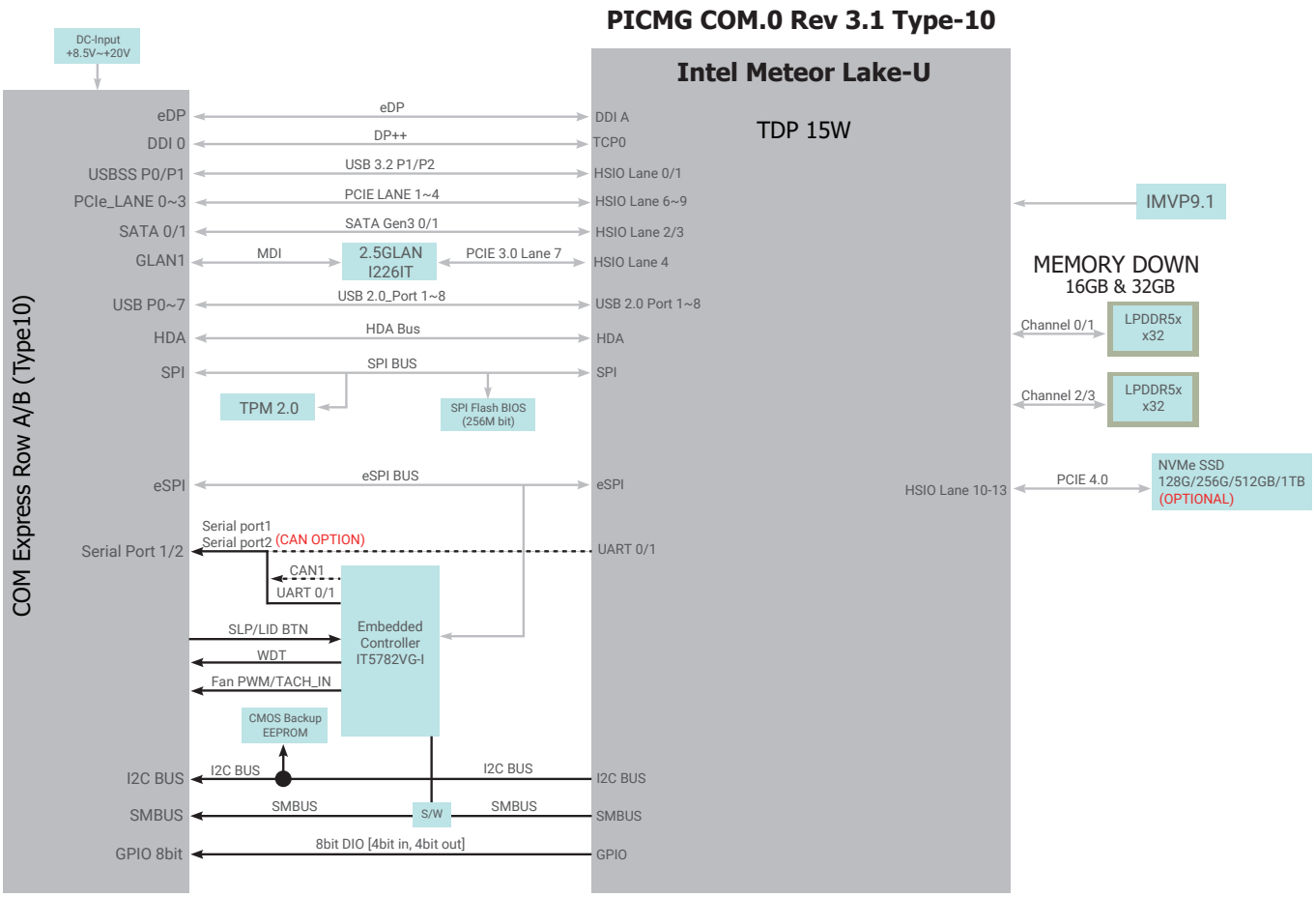

MECHANICAL DRAWING

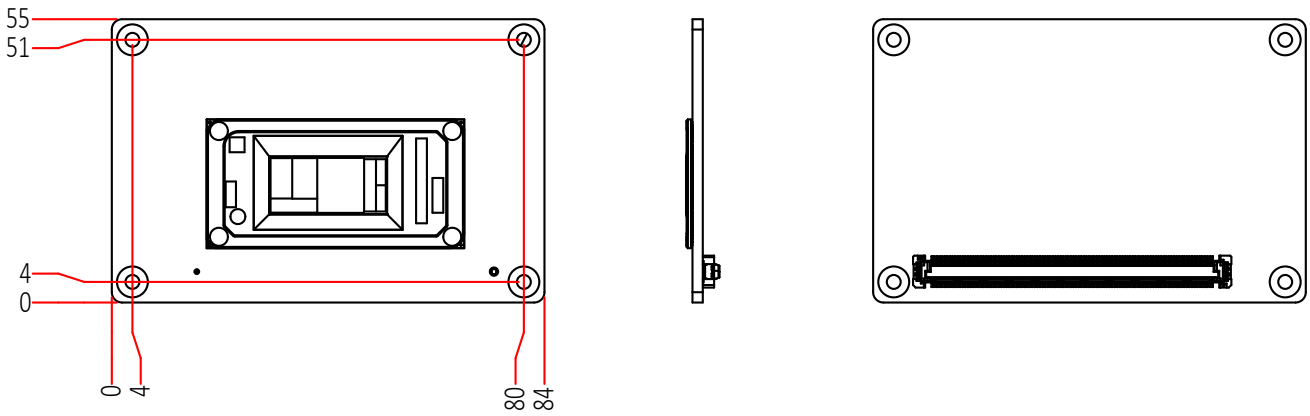

SPECIFICATION

SYSTEM	**Processor**	Intel Core Ultra U-series processors (Code Name : Meteor Lake U) Intel Core Ultra 7 Processor 165U (2 P-Cores x 1.7 GHz, 8 E-Cores x 1.2 GHz, 12MB cache,15W) Intel Core Ultra 7 Processor 155U (2 P-Cores x 1.7 GHz, 8 E-Cores x 1.2 GHz, 12MB cache,15W) Intel Core Ultra 5 Processor 125U (2 P-Cores x 1.3 GHz, 8 E-Cores x 0.8 GHz, 12MB cache,15W)
	Memory	LPDDR5 up to 32GB Dual Channel LPDDR5 7467MHz 8GB supported by project basis. In-band ECC (IBECC) Supported by Ubuntu
	BIOS	AMI SPI 256Mbit
GRAPHICS	**Controller**	Intel® UHD
	Feature	DX12, Open GL 4.6, Vulkan 1.2 (Windows) Mesa 3D, Open GL 4.6, Vulkan 1.2 (Linux) HW Decode : 4K60 8b 4:2:0 AVC HW Encode : 4K60 10b 4:4:4 HEVC/VP9/SCC 4K60 8b 4:2:0 AVC
	Display	1 x DDI 1 x eDP eDP: resolution up to 4096x2160 @ 60Hz HDMI: resolution up to 4096x2160 @ 30Hz DP++: resolution up to 4096x2160 @ 60Hz, 3840x2160 @60Hz
	Dual Displays	DDI + eDP
EXPANSION	**Interface**	4 x PCIe x1 (Gen 3) 1 x I2C 1 x SMBus 1 x eSPI 1 x GSPI 2 x UART (TX/RX)
AUDIO	**Interface**	HD Audio
ETHERNET	**Controller**	1 x Intel® I226-IT (10/100/1000Mbps/2.5Gbps)
I/O	**USB**	2 x USB 3.2 Gen2 8 x USB 2.0
	SATA	2 x SATA 3.0 (up to 6Gb/s)
	NVMe SSD	1 x 128GB/256GB/512GB/1024GB onboard NVME SSD (available upon request)
	DIO	1 x 8-bit DIO
WATCHDOG TIMER	**Output & Interval**	System Reset, Programmable via Software from 1 to 255 Seconds
SECURITY	**TPM**	TPM 2.0
POWER	**Type**	8.5V~20V, 5VSB, VCC_RTC (ATX mode) 8.5V~20V, VCC_RTC (AT mode)
	Consumption	TBD
OS SUPPORT	**OS Support (UEFI Only)**	Windows 10 IoT Enterprise 64-bit Windows 11
		Linux
ENVIRONMENT	**Temperature**	Operating: -40 to 85°C
		Storage: -40 to 85°C
	Humidity	Operating: 5 to 90% RH
		Storage: 5 to 90% RH
	MTBF	TBD
MECHANISM	**Dimensions**	COM Express® Mini 84mm (3.3") x 55mm (2.16")
	Compliance	PICMG COM Express® R3.1, Type 10
STANDARDS AND CERTIFICATIONS	**Certifications**	CE, FCC

ORDERING INFORMATION

Model Name	P/N	CPU	Memory	eDP	TPM 2.0	Thernal	Operating Temp.
MTU9A2-TC30-165U	770-MTU9A21-000G	Intel® Core Ultra 7 Processor 165U, 10 Cores, 15W	32GB	eDP	TPM 2.0	Cooler	-40~85°C
MTU9A2-TC10-155U	770-MTU9A21-100G	Intel® Core Ultra 7 Processor 155U, 10 Cores, 15W	16GB				
MTU9A2-TC10-125U	770-MTU9A21-300G	Intel® Core Ultra 5 Processor 125U, 10 Cores, 15W	16GB				

PACKING LIST

Cooler	A71-108310-A00G

OPTIONAL ITEMS

Heatspreader	TBD
COM335 Carrier Board Kit	770-CM3351-000G

DFI reserves the right to change the specifications at any time prior to the product's release. Changes thereafter will be based on the product's revision. Please contact your sales representative for the exact revision offered in your area. All product names mentioned are trademarks of their respective companies. © October 29, 2025 DFI Inc.