IoT Solutions Alliance

CS650-Q370

Desktop

Q370

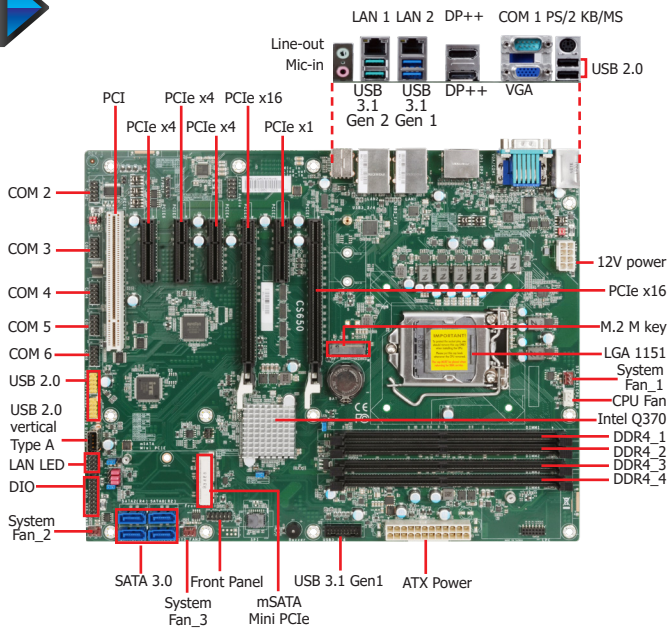

Features

- 4 DDR4 DIMM up to 128GB
- 3 independent displays: VGA + DP++ + DP++
- DP++ resolution up to 4096x2160 @ 60Hz
- Multiple expansion: 2 PCIe x16 (1 x16 signal or 2 x8 signals), 3 PCIe x4, 1 PCIe x1, 1 PCI, 1 Full-sized Mini PCIe, 1 M.2 M key
- Rich I/O: 2 Intel GbE, 6 COM, 2 USB 3.1 Gen 2, 4 USB 3.1 Gen 1, 6 USB 2.0

2 Extension Modules for Additional 4 COM Ports (via the LPC connector)

DFI's Proprietary Technology

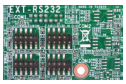

EXT-RS232
- 4 RS232

EXT-RS485
- 4 RS485

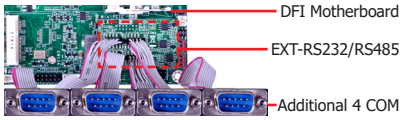

Ordering Information

Model Name	P/N	Memory	GbE	RS-232/ 422/485	RS-232	USB3.1 Gen 2	USB3.1 Gen 1	USB 2.0	TPM 2.0	Power	Thermal	Temp.
CS650-Q370CRM	770-CS6503-100G	4 DIMM	2	2	4	2	4	6	0	24-pin ATX	Active	-5 to 65°C
CS650-Q370CRM	770-CS6503-300G	4 DIMM	2	2	4	2	4	6	1	24-pin ATX	Active	-5 to 65°C

Mechanical Drawing

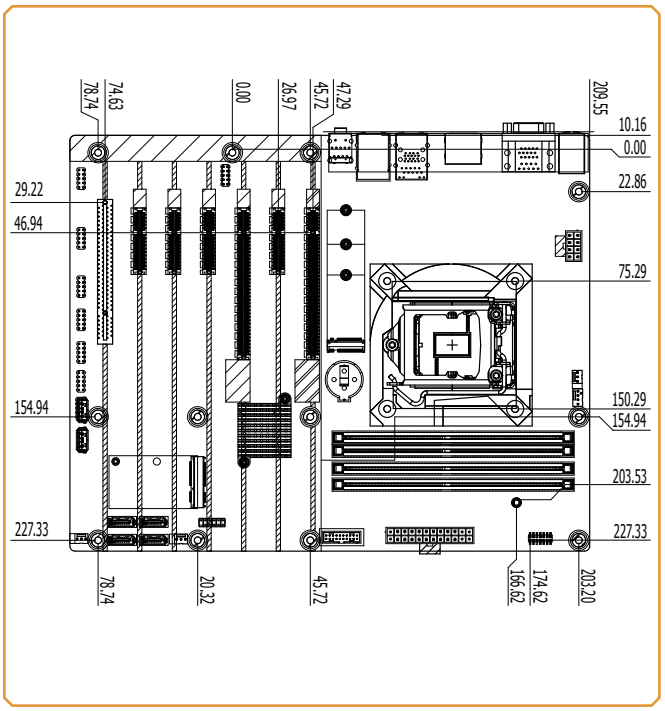

Block Diagram

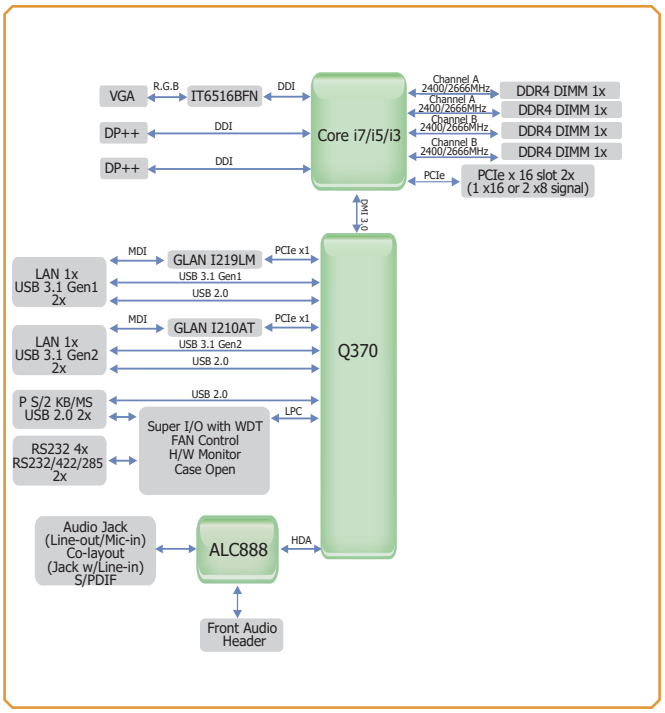

Specifications

SYSTEM	**Processor**	8th Generation Intel® Core™ /Pentium®/Celeron® LGA 1151 Socket Processors, TDP support up to 95W: Intel® Core™ i7-8700 (6 Cores, 12M Cache, up to 4.6 GHz); 65W Intel® Core™ i7-8700T (6 Cores, 12M Cache, up to 4.0 GHz); 35W Intel® Core™ i5-8500 (6 Cores, 9M Cache, up to 4.1 GHz); 65W Intel® Core™ i5-8500T (6 Cores, 9M Cache, up to 3.5 GHz); 35W Intel® Core™ i3-8100 (4 Cores, 6M Cache, 3.6 GHz); 65W Intel® Core™ i3-8100T (4 Cores, 6M Cache, to 3.1 GHz); 35W Intel® Pentium® G5400 (2 Cores, 4M Cache, 3.7 GHz); 58W Intel® Pentium® G5400T (2 Cores, 4M Cache, 3.1 GHz); 35W Intel® Celeron® G4900 (2 Cores, 2M Cache, 3.1 GHz); 54W Intel® Celeron® G4900T (2 Cores, 2M Cache, 2.9 GHz); 35W	9th Generation Intel® Core™ LGA 1151 Socket Processors, TDP support up to 95W: Intel® Core™ i7-9700E (8 Cores, 12M Cache, up to 4.4 GHz); 65W Intel® Core™ i7-9700TE (8 Cores, 12M Cache, up to 3.8 GHz); 35W Intel® Core™ i5-9500E (6 Cores, 9M Cache, up to 4.2 GHz); 65W Intel® Core™ i5-9500TE (6 Cores, 9M Cache, up to 3.6 GHz); 35W Intel® Core™ i3-9100E (4 Cores, 6M Cache, 3.7 GHz); 65W Intel® Core™ i3-9100TE (4 Cores, 6M Cache, to 3.2 GHz); 35W
	Chipset	Intel® Q370 Chipset	
	Memory	Four 288-pin DIMM up to 128GB	Dual Channel DDR4 2400/2666MHz
	BIOS	AMI SPI 128Mbit	
GRAPHICS	**Controller**	Intel® HD Gen 9 Graphics	
	Feature	OpenGL 5.0, DirectX 12, OpenCL 2.1 HW Decode: AVC/H.264, MPEG2, VC1/WMV9, JPEG/MJPEG, HEVC/H265, VP8, VP9 HW Encode: MPEG2, AVC/H264, JPEG, HEVC/H265, VP8, VP9	
	Display	1 x VGA 2 x DP++	VGA: resolution up to 1920x1200 @ 60Hz DP++: resolution up to 4096x2160 @ 60Hz
	Triple Displays	VGA + DP++ + DP++	
EXPANSION	**Interface**	1 x Full-sized Mini PCIe (PCIe/SATA/USB2.0), share with SATA 3(R5) 1 x M.2 2242/2260/2280 M key (PCIe Gen3 x 4 NVMe/SATA) 2 x PCIe x16 (Gen 3) (1 x16 signal or 2 x8 signals) 3 x PCIe x4 (Gen 3) 1 x PCIe x1 (Gen 3) 1 x PCI	
AUDIO	**Audio Codec**	Realtek ALC888	
ETHERNET	**Controller**	1 x Intel® I210AT PCIe (10/100/1000Mbps) 1 x Intel® I219LM PCIe with iAMT12.0 (10/100/1000Mbps) (only Core i7/i5 supports iAMT)	
REAR I/O	**Ethernet**	2 x GbE (RJ-45)	
	USB	2 x USB 3.1 Gen2 2 x USB 2.0	2 x USB 3.1 Gen1
	Serial	1 x RS-232/422/485 (RS-232 w/ power) (DB-9)	
	PS/2	1 x PS/2 (mini-DIN-6)	
	Display	1 x VGA	2 x DP++
	Audio	1 x Line-out, 1 x Mic-in, 1 x Line-in (opt., MOQ required)	
INTERNAL I/O	**Serial**	1 x RS-232/422/485 (RS-232 w/ power) (2.54mm pitch)	4 x RS-232 (2.54mm pitch)
	USB	2 x USB 3.1 Gen 1 (2.00mm pitch) 4 x USB 2.0 (2.54mm pitch) (1 x USB 2.0 colay vertical Type A) (opt., MOQ required)	
	Audio	1 x Front Audio Header	1 x S/PDIF
	SATA	4 x SATA 3.0 (up to 6Gb/s, SATA 3(R5) shared with mini PCIe (SATA), default at mini PCIe) RAID 0/1/5/10	
	DIO	1 x 8-bit DIO	
	LPC	1 x LPC (supports LPC EXT-RS232/RS485 module)	
	SMBus	1 x SMBus	
WATCHDOG TIMER	**Output & Interval**	System Reset, Programmable via Software from 1 to 255 Seconds	
SECURITY	**TPM**	Infineon TPM2.0 (opt., MOQ required)	
POWER	**Type**	ATX	
	Connector	8-pin ATX 12V power	24-pin ATX power
	Consumption	Typical: i7-8700K: 3.3V @ 0.34A (1.122Watt); 5V @ 0.58A (2.9Watt); 12V @ 0.65A (7.8Watt) Max.: i7-8700K:3.3V @ 0.52A (1.716Watt); 5V @ 1.27A (6.35Watt); 12V @ 13.01A (156.12Watt)	
	RTC Battery	CR2032 Coin Cell	
OS SUPPORT		Windows 10 IoT Enterprise 64-bit Windows 11 GAC	Linux
ENVIRONMENT	**Temperature**	Operating: -5 to 65°C Storage: -30 to 60°C with RTC Battery; -40 to 85°C without RTC Battery	
	Humidity	Operating: 5 to 95% RH	Storage: 5 to 95% RH
	MTBF	534,017 hrs @ 25°C; 298,488 hrs @ 45°C ; 184,547 hrs @ 60°C ; 133,068 hrs @ 70°C Calculation Model: Telcordia Issue 4 Environment: GB, GC - Ground Benign, Controlled	
MECHANICAL	**Dimensions**	ATX Form Factor	305mm (12") x 244mm (9.6")
	Height	PCB: 1.6mm	Top Side: 32mm Bottom Side: 4.4mm
CERTIFICATIONS		CE, FCC Class B, RoHS, KC, UL	

Packing List

• 1 CS650-Q370 motherboard	
• 1 COM port cables (Length: 300mm, 2 x COM ports)	A81-015026-023G
• 1 Serial ATA data cable (Length: 500mm)	332-553001-005G
• 1 I/O shield	A49-CS6310-000G
• 1 mini PCIe screw	A32-112016-041G

Optional Items

• USB 2.0 port cable (Length: 350mm)	A81-001066-016G
• USB 3.1 Gen1 port cable (Length: 320mm)	A81-001052-023G
• COM port cable (Length: 300mm, 2 x COM ports)	A81-015026-023G
• Serial ATA data cable (Length: 500mm, W/LOCK)	332-553001-005G
• Thermal solution (For 35W, Height: 37.3mm)	A71-101107-000G
• Thermal solution (For 65W, Height: 74.47mm)	A71-101158-000G
• Thermal solution (For 95W, Height: 76.6mm)	A71-101143-000G
• LPC EXT-RS232 module (4 x RS232 ports)	770-EXTRS1-000G
• LPC EXT-RS485 module (4 x RS485 ports)	770-EXTRS1-100G
• DP to HDMI dongle	612-D2H13M-000G

DFI reserves the right to change the specifications at any time prior to the product's release. Changes thereafter will be based on the product's revision. Please contact your sales representative for the exact revision offered in your area. All product names mentioned are trademarks of their respective companies. © October 18, 2025 DFI Inc.