www.darveen.com

NBC-2412
User's Manual

with Microsoft® Windows® 10
with Microsoft® Windows® 11
with Ubuntu

Table of Contents

Chapter 1. About this Manual 3

1.1 Manual version revision record 3
1.2 Copyright Statement 3
1.3 Disclaimer 3
1.4 Trademark 3
1.5 Warranty terms 3
1.6 Safety guidance for installed and use 3

Chapter 2. Product Overview 6

2.1 Overview of the NBC-2412 function 6

Chapter 3. Product Presentation 8

3.1 Product Appearance 8
3.2 Appearance size diagram 8
3.3 Product specification introduction 9

Chapter 4. IO Panel Description 12

4.1 NBC-2412 panel is shown below 12
4.2 Serial communication port (simply "serial port") 12
4.3 DC port 14
4.4 Display Output (HDMI) 14
4.5 Remote 14
4.6 CAN [Optional] 15
4.7 16 DIO [Optional] 16
4.8 Ethernet Interface (LAN) 20
4.9 USB Interface 21
4.10 Audio Interface (Line-out, Mic-in) 21
4.11 Explanation of indicator lights 21

Chapter 5. Directions for Use 23

5.1 OOBA 23
5.2 Note the following points when unpacking the equipment: 23
5.3 Work environment 23
5.4 Preparation Before Installation 23
5.5 Installation Steps 24
5.6 Gigabit Network Card Camera Configuration 24

Chapter 6. Troubleshooting Guide 26

6.1 Boot Abnormal Q&A 26

Chapter 7. After-Sale Service 29

Chapter 1. About this Manual

Chapter 1. About this Manual

1.1 Manual version revision record

Date	Version number	Revise Content	Modified By
2025/07/05	V1.0	Prepare the manual for the first time	LWT

1.2 Copyright Statement

This manual is the use manual of NBC-2412 series products. The products and their related documents are owned by Darveen Co., Ltd. (hereinafter referred to as "Darveen"), with all of the interpretation rights.

If the manual is different from the latest product, please contact our FAE. Darveen will not be responsible for any direct, indirect, intentional or unintentional damage or hazards caused by improper installation or use.

This manual without the authorization of Darveen shall not, in any way, in any form be copied, translated, or transferred for any commercial purposes, except for the non-commercial purposes or personal use of download or printing (prohibited to modify the manual, and must indicate the ownership of the manual).

1.3 Disclaimer

This manual only describes the use of embedded industrial computers manufactured by Darveen. If you use the product, unless otherwise mandatory by law, Darveen shall not bear any express or implied warranty or guarantee for the product for the use of this manual, including but not limited to the following:
(1) This product will meet your needs or expectations;
(2) The information contained in this product is real-time and correct;
(3) This product does not infringe on the rights of any others

You clearly understand and agree that, in addition to the law, breach, its subsidiaries, agents, partners, relationships, managers, employees and authorized person need not be responsible for you any direct, indirect, special, derivative, incidental, punitive damage (including but not limited to the goodwill, profit, use data damage or other intangible loss).

With an extremely rigorous and scientific attitude, the manual is compiled, but the technology is constantly developing, and the speed of product upgrading is far beyond the speed of the preparation, so we reserve the right to modify it at any time without notification.

1.4 Trademark

The ownership of the trademark involved in this manual, Darveen Co., Ltd. , is owned by the holder of Darveen Co., Ltd. No one shall use it without their permission.

1.5 Warranty terms

The default product warranty period is 1 year. In case of special circumstances, the contract signed by both parties shall prevail

1.6 Safety guidance for installed and use

1. Please read carefully and keep this manual properly before use.
2. Keep the product dry and packed intact before installation, ensuring that the equipment is placed in a stable surface, and an accidental fall or flip may cause equipment failure or damage.
3. In order to avoid unnecessary damage caused by frequent turning to the product, wait at least 30 seconds before shutdown of the machine. If the equipment is not used for a long time, disconnect the power cord to avoid the equipment being damaged by instantaneous voltage.
4. The chassis vents are used for ventilation to avoid overheating of the parts in the chassis. Do not mask or block such openings.
5. Before connecting the product to the power supply, confirm the supply voltage and adjust the voltage to 220V.
6. Protect the power cord from trampling or other accidents that may cause sudden power failure, and do not stack anything on the power cord.
7. Unplug the power cord before unplugging any expansion card or module.
8. Note to all the notes and warnings mentioned in the manual.
9. Do not make any changes or modifications to this product. If there is any abnormal use of the equipment, please find a professional personnel for safety reasons.
10. Please do not place or store the product at an ambient temperature above 60°C (140° F) as it will cause harm to the product.
11. If the battery is not replaced properly, it can cause a danger. Be sure to use the same model or equivalent battery as recommended by the manufacturer.

Chapter 2. Product Overview

Chapter 2. Product Overview

Industrial control machine (also known as an Industrial Personal Computer or IPC) is the industrial control computer, is a use of bus structure, the production process and electromechanical equipment, process equipment for detection and control of the tool general name.

Industrial control machine has important computer attributes and characteristics, such as computer CPU, hard disk, memory, peripherals and interfaces, and operating system, control network and protocols, computing power, friendly man-machine interface.

The industrial control machine often operates in a harsh environment, and the safety requirements for data are higher. Therefore, the industrial control machine is usually reinforced, dust proof, moisture proof, corrosion proof, radiation prevention and other special designs.

2.1 Overview of the NBC-2412 function

The NBC-2412 fanless industrial computer boasts a cableless design, delivering superior resistance to vibrations and electromagnetic interference. Its innovative modular architecture, which integrates a CPU board with a plug-in I/O board, significantly streamlines product upgrades, reducing both time and costs. This design also enables effortless customization to align with diverse customer application requirements. Additionally, the NBC-2412 provides extensive I/O interfaces and expansion options, including COM ports, GbE LAN, GPIO, WiFi, and 4G connectivity, ensuring versatile and reliable performance in demanding industrial environments.

* Table 2.1-1 NBC-2412 Functional Overview table

Product Keywords	Fanless Box Computer with Intel® Core™ i3/i5/i7 Processor, 2x LAN, 6x COM
Product Features	▪ Intel® Core™ i3/i5/i7 processor ▪ 6x COM, 2x LAN, 8x USB, 1x VGA, 1x HDMI ▪ 2x CAN2.0 (optional), 16x Opto-isolated DIO(optional) ▪ 9 to 36VDC power input

Chapter 3. Product Presentation

Chapter 3. Product Presentation

3.1 Product Appearance

* Figure 3.1-1 front view of NBC-2412

3.2 Appearance size diagram

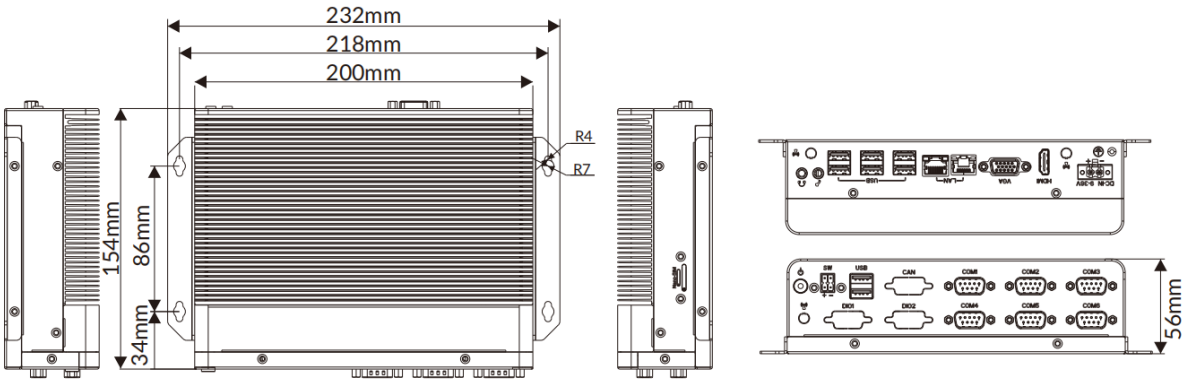

* Figure 3.2-1 NBC-2412 dimensional drawing

3.3 Product specification introduction

* Table 3.3-1 NBC-2412 product specification

System				
CPU	Intel® Core™ i3-8145U /i5-8265U	Intel®Core™ i3-10110U /i5-10210U/i7-10510U	Intel® Core™ i3-1115G4/ i5-1145G7/i7-1185G7	Intel® Core™ i3-1215U/ i5-1235U/i7-1255U
CPU TDP	15W			
Memory	1x DDR4 2666 MHz SO-DIMM up to 32GB		1x DDR4 3200 MHz SO-DIMM up to 32GB	
Storage	1x mSATA		1x M.2 2280 Sata	
BIOS	AMI UEFI			
Watchdog Timer	Software Programmable supports 256 levels system reset			
I/O Ports				
USB	6x USB 2.0, 2x USB 3.0			
Serial	6x COM(1x RS-232/422/485)		6x COM (1x RS-232/422/485, 1x RS-232/485)	
Ethernet	2x RJ45 GbE Intel® I226-V			
Display	1x VGA, 1x HDMI			
SIM Card Slot	1x SIM card slot(opfional)			
DIO	16x Opto-isolated DIO(opfional)			
CAN bus	2x CAN 2.0B(opfional)			
Antenna	3x SMA antenna holes			
Expansion Slot				
Mini PCIe	1x Full length mini PCIe		N/A	
M.2	N/A		1x M.2 2230 E-Key/1x M.2 2280 Sata	
RF Communication				
Wi-Fi	Mini PCIe		M.2 2230 E-Key	
Cellular	Mini PCIe			
Bluetooth	Mini PCIe		M.2 2230 E-Key	
GNSS	Mini PCIe			
Audio				
Audio	Mic in, line out			
Power				
BuAon	Yes			
Remote Power On/Off	4-Pin Remote SW&Power LED			
DC Input	9-36VDC			
Power Mode	AT/ATX			
Operating System				
Windows	Windows 10/11			
Linux	Ubuntu			
Mechanical				
Dimensions (W x D x H)	200 x 154 x 56 mm (7.87 x 6.06 x 2.21 inches)			
Weight (N.W.)	2 kg (4.41 lbs)			
Mounfing	Wall mount			
Material	Aluminum alloy			
Environment				
Operafing Temperature	-10 to 60° C (14 to 140° F)			
Storage Temperature	-20 to 60° C (-4 to 140° F)			
Relafive Humidity	10% to 95% @ 40° C (104° F), non-condensing			

Certification	
EMC	CE, FCC Class A

Chapter 4. IO Panel Description

Chapter 4. IO Panel Description

4.1 NBC-2412 panel is shown below

* Figure 4.1-1 NBC-2412 panel diagram

4.2 Serial communication port (simply "serial port")

Equipped with 6 DP9 serial ports , COM1 can be switched to RS485 or RS232 or RS422.

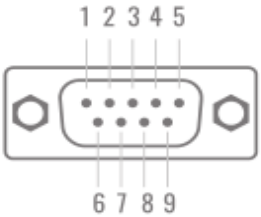

* Figure 4.2-1 serial port diagram of DP 9

* Table 4.2-1 Explanation of serial definition for DP 9

PIN	Signal name	PIN	Signal name
1	DCD/RS485+	2	RXD/RS485-
3	TXD	4	DTR
5	GND	6	DSR
7	RTS	8	CTS
9	RI	10	NC

Method to enter BIOS:
1. After booting up, press Delete continuously to directly enter BIOS
2. Press F11 continuously after booting up, then select Enter Setup to enter
BIOS hotkey: F1: Help; F9: Restore factory settings; F10: Save and exit; ESC: Exit

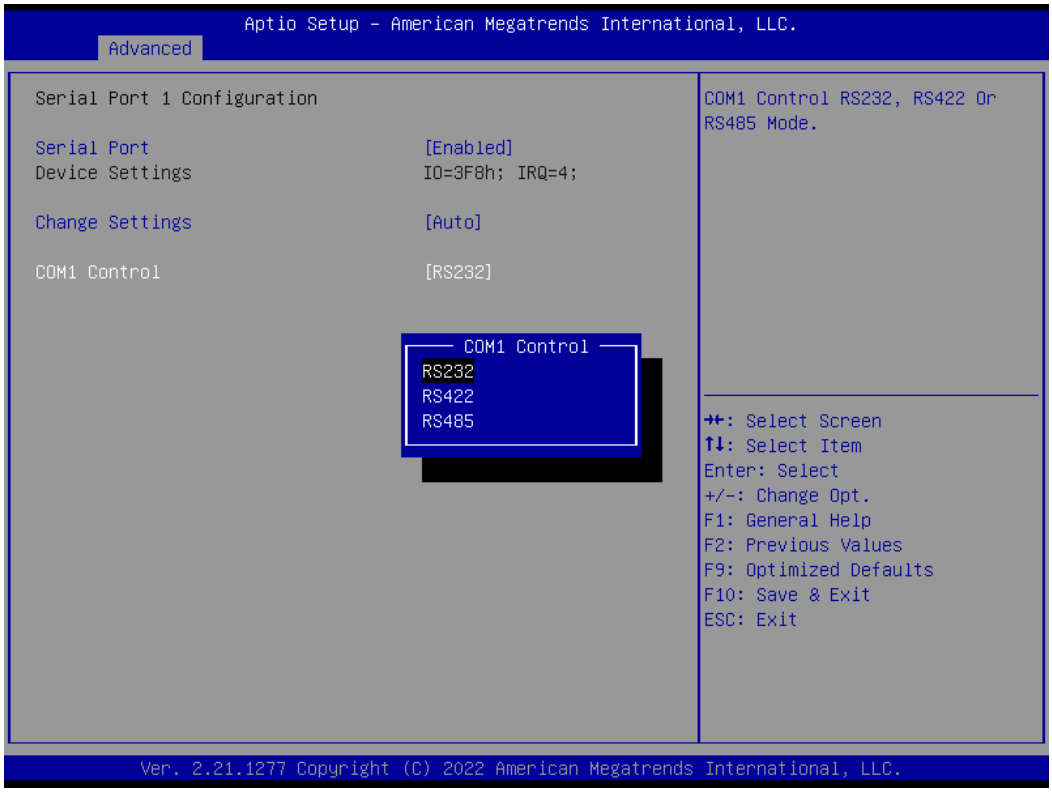

* Figure 4.2-2Explanation of serial definition RS232/422/485 settings for COM1

COM1 can be switched to RS422.

* Table 4.2-2 Explanation of serial definition for DP 9

	PIN	Signal name	PIN	Signal name
COM1RS 422	1	TXD+	2	TXD-
	3	RXD+	4	RXD-

4.3 DC port

Equipped with Input 9-36V, 1x 2-pin terminal block connector as shown in Fig.

* Figure 4.3-1 DC port diagram

Note: Use the adapter or switch power supply supporting the equipment. Do not connect more than 36V power supply, otherwise it will cause the motherboard over voltage to burn!!!

4.4 Display Output (HDMI)

Equipped with 1 HDMI and 1 VGA display interface.

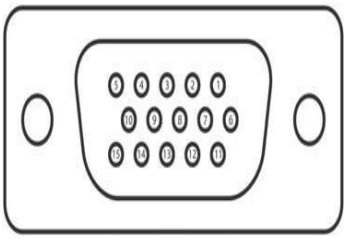

* Figure 4.4-1 VGA Interface

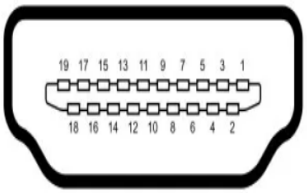

* Figure 4.4-2 HDMI Interface

4.5 Remote

Equipped with 1 set of remote switches, you can achieve power on/off. as shown in the figure.

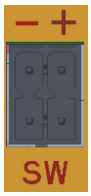

* Figure 4.5-1 Remote

* Table 4.5-1 Definitions table

Pin		Signal	Description
1	SW	PBTN	Power on or Power off
2		GND	
3	+	LED	Power LED
4	-	GND	

4.6 CAN [Optional]

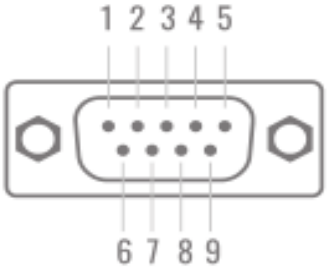

* Figure 4.6-1 serial port diagram of DP 9

* Table 4.6-1 Definitions table

PIN	Signal name	PIN	Signal name
1	CAN1-H	2	CAN1-GND
3	CAN1-L	4	CAN2-H
5	CAN2-GND	6	CAN2-L
7		8	
9		10	

* Table 4.6-2 Definitions table

Parameter	Specification
Product	MiniPCIeCAN or DB9CAN
CAN Channels	2 channels
CAN Protocol	Supports CAN2.0B, compatible with CAN2.0A
Operating Voltage	3.3V ±5%
Power Consumption	≤3W
Isolation Voltage	3000VDC
Output Terminal	2×1.25-3P connectors, converted to 1×DB9 or 2×DB9 via interface board
CAN Baud Rate	40Kbps~1Mbps (CAN)
Data Reception Capability	10,000 frames/sec/channel (remote frame, single-frame transmission)
Data Transmission Capability	4,000 frames/sec/channel (remote frame)
Windows System Driver	Supported
Linux System Driver	Supported
Android Driver	Under testing
Dimensions (L×W)	MiniPCIe: 50.95mm × 30mm

	DB9: 32mm × 28mm
Operating Temperature	-40°C ~ +85°C
Ambient Humidity	10%~90% (non-condensing)
Environmental Requirements	Avoid corrosive gases

4.7 16 DIO [Optional]

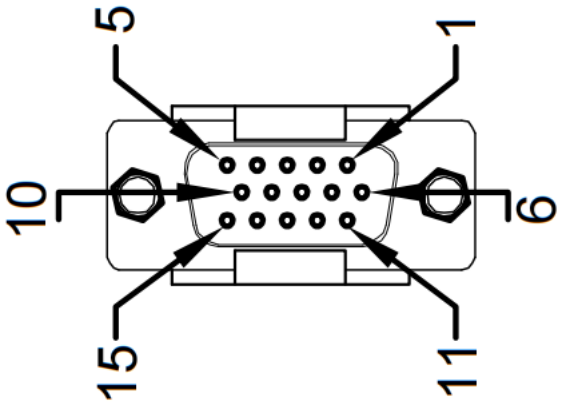

* Figure 4.7-1 Definition diagram of the GPIO communication interface

4.7.1. DI Specification

Item	Description
8 DI	Type: NPN/PNP Input signal voltage: DC24V ± 10% Input ON current: above 4.5mA Input OFF current: below 1.5mA Input response time: 0.1ms (device specification) Input signal form: bidirectional opto-coupler Circuit insulation: opto-electronic coupling insulation Input action display: When inputting ON, the software reads 1

4.7.2. DI design schematic diagram

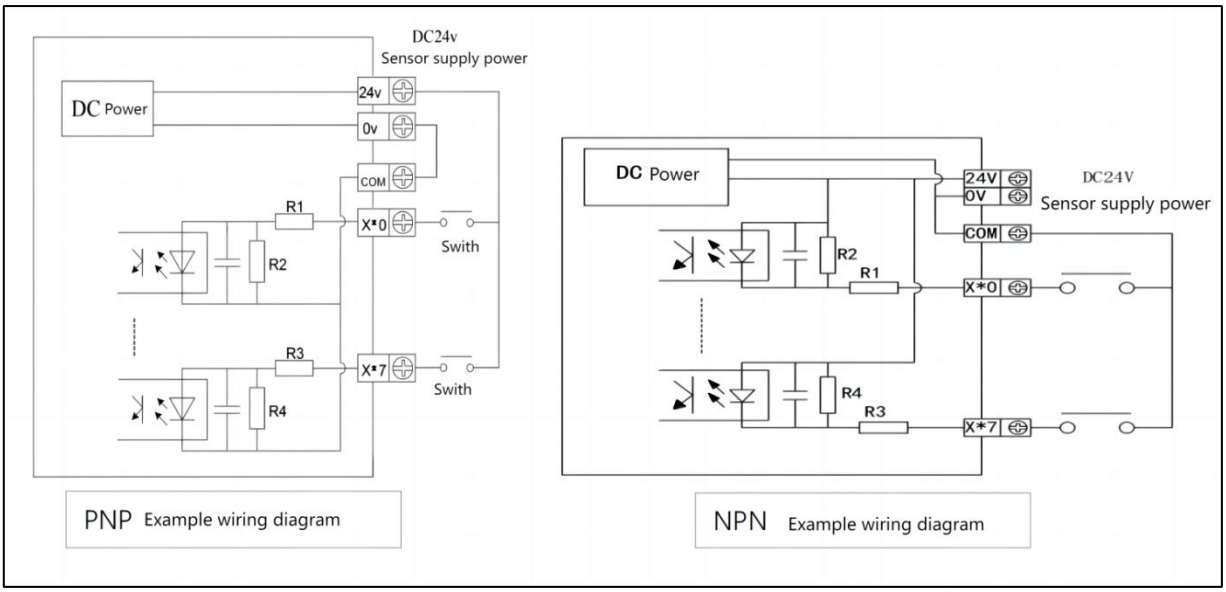

Diagram

4.7.3. DI Example diagram

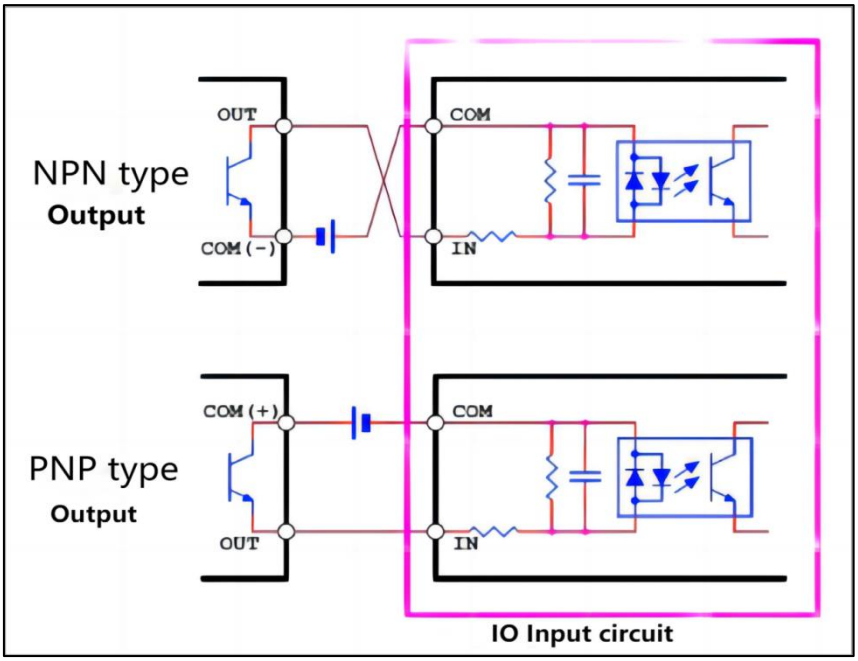

Diagram

4.7.4. DO Specification

Item	Description
8 DO	Type: NPN Output load voltage: DC24V ± 10% Load current: Max 100mA/DC24V Short circuit protection current: 200mA Output response time: 0.2ms (device specification) Output signal form: NPN open collector electrode Circuit insulation: opto-electronic coupling insulation Output action display: When software is set to 1, conduction occurs

4.7.5. DO design schematic diagram

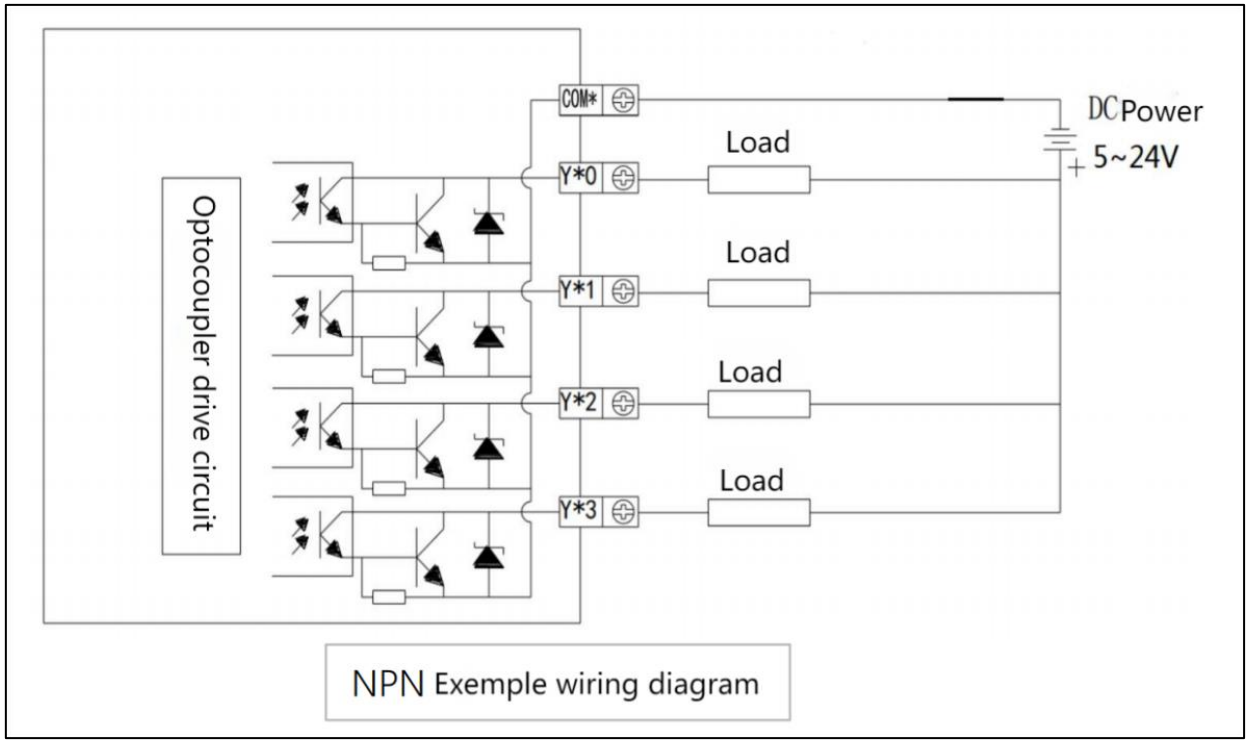

Diagram

4.7.6. DO Example diagram

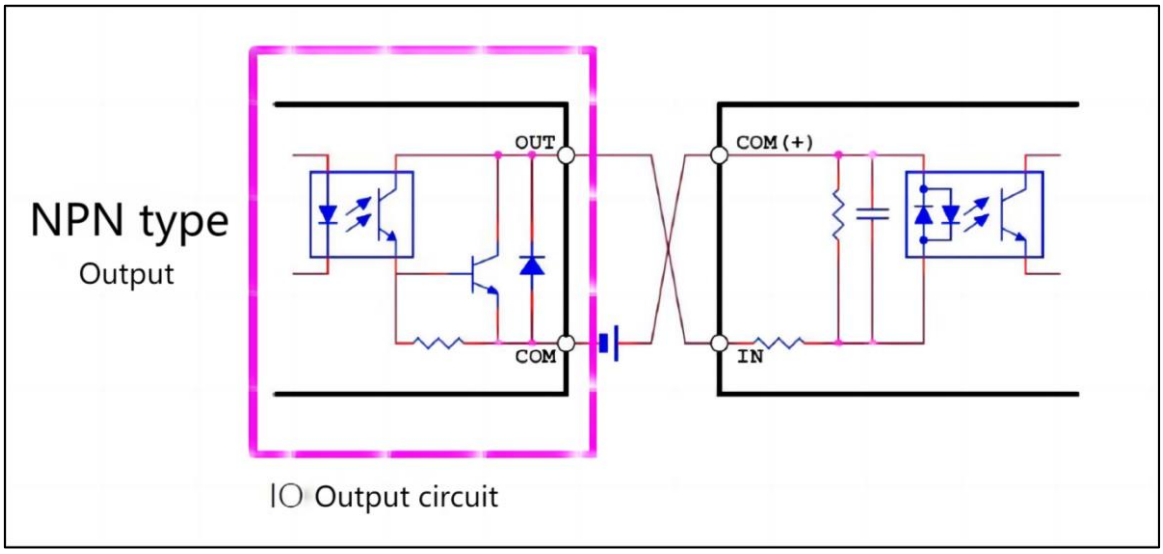

Diagram

4.7.7. Interface definition

G01 Communication interface definition

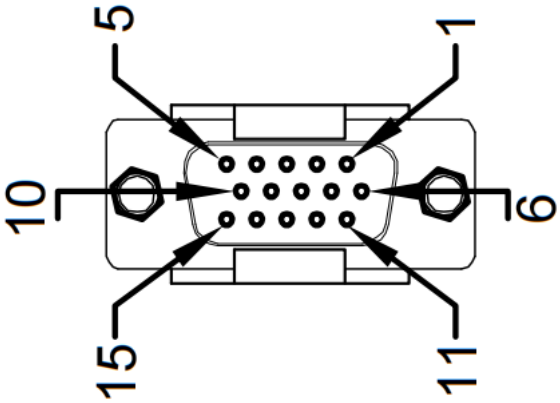

Diagram

Pin	Signal	Description
1	DI0	Isolated Inputs0
2	DI1	Isolated Inputs1
3	DI2	Isolated Inputs2
4	DI3	Isolated Inputs3
5	DI_COM_L0	Input common terminal0
6	DO0	Isolated Outputs0
7	DO1	Isolated Outputs1
8	DO2	Isolated Outputs2
9	DO3	Isolated Outputs3
10	DO_COM_L0	Output common terminal0

G02 Communication interface definition

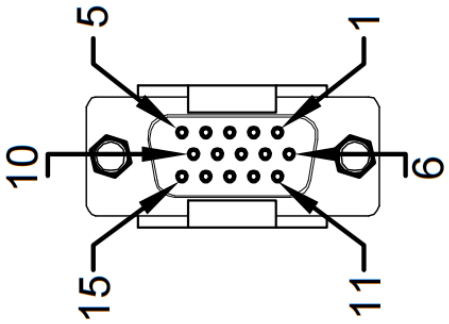

Diagram

Pin	Signal	Description
1	DI4	Isolated Inputs4
2	DI5	Isolated Inputs5
3	DI6	Isolated Inputs6
4	DI7	Isolated Inputs7
5	DI_COM_L1	Input common terminal1
6	DO4	Isolated Outputs4
7	DO5	Isolated Outputs5
8	DO6	Isolated Outputs6
9	DO7	Isolated Outputs7
10	DO_COM_L1	Output common terminal1

4.8 Ethernet Interface (LAN)

With 2 Ethernet interfaces, as shown in the figure, and supports 10 / 100 / 1000Mbps. The port uses the standard RJ-45 jack with LED indicators indicating the connection and transmission status. See the chart below for the indicator light representation and the machine status.

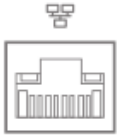

* Figure 4.8-1 Ethernet interface diagram

* Table 4.8-1 LED indicator light definitions table

LED pilot lamp			
Left side LED			offside LED
close	orange	green	green
10Link	100Link	1000Link	transfer

4.9 USB Interface

Equipped with 2 USB3.0 and 6 USB 2.0 interfaces, the USB interface supports the plug and play function, allowing the user to connect or disconnect the device at any time, as shown in the chart.

* Figure 4.9-1 USB interface diagram

* Table 4.9-1 USB interface definition table

Pin	Signal
1	Vbus
2	D-
3	D+
4	GND

4.10 Audio Interface (Line-out, Mic-in)

Which support line output and line input. Integrated Realtek ALC897 HD digital audio decoder, 6-channel high fidelity audio controller and the interface is shown in the chart

* Figure 4.10-1 Audio interface diagram

Table 4.12-1 Audio interface definition table

icon	description
	Line-out
	Mic-in

4.11 Explanation of indicator lights

* Table 4.11-1 Machine indicator table

icon	pigment	State instructions	description
	green	mains switch	DC power supply off: off / DC power supply on: always on

Chapter 5. Directions for Use

Chapter 5. Directions for Use

This section provides a simple operation description for the normal use of NBC-2412 series products, introducing the working environment, installation steps and the basic operation of the system protection functions of industrial computers.

5.1 OOBA

Before opening the package, please check whether the product model indicated on the outer package is consistent with the product model ordered. After opening the package, carefully check whether the accessories are complete according to the packing list or the order contract. If the surface of the industrial computer is damaged, or the product content is not consistent, please do not use it, and contact the dealer immediately.

Note:
In order to prevent electrostatic damage to industrial computers, please touch the effective grounded metal object to release the electrostatic charge carried by the body, and wear anti-static gloves.

5.2 Note the following points when unpacking the equipment:

1. It is recommended that you do not discard the original packaging materials. Please keep the original packaging materials for use when transporting the equipment again.
2. Check the delivered equipment for any obvious damage caused during transit.
3. Please confirm that the received goods include all equipment and accessories as listed in the packing list. If there is any discrepancy or transportation damage, please contact the relevant business or customer service personnel.

Table 5.2-1 Machine packing list table

List of binning		
order number	type	quantity
1	The NBC-2412 series of industrial computer	1 set
2	Adapter, power supply cord	1 set
3	Wall hanging kit	1 set
4	Install wall screw	1 set
5	IO terminal (with antenna rod if configured with antenna)	1 set

5.3 Work environment

1. Industrial computers need to be far away from the high-power and strong electromagnetic interference of electrical appliances and the environment;
2. The working environment temperature should be between 0 degrees and 55 degrees Celsius;
3. The power supply voltage shall be kept between 200 V and 240 V.

5.4 Preparation Before Installation

Before installation, please prepare the relevant items, such as:
1. NBC-2412 series of industrial computers, and related power supply and cables;
2. Display, and the display cable between the display and the industrial controller;
3.USB mouse and keyboard;

4. PLC, camera and corresponding connecting lines;
5. Power supply.

5.5 Installation Steps

Hardware connection:
1.Connect the equipped display to the industrial computer display interface;
2.Connect keyboard, mouse and other to industrial computer USB interface;
3.Connect other hardware, such as PLC and camera, according to the corresponding interface;
4.Power adapter access 220V voltage, power on.

5.6 Gigabit Network Card Camera Configuration

1. Confirm that the camera is connected to the power supply and that the camera is connected to the industrial computer.
2. Close the firewall, control panel-> Windows Defender-> Set-> Implement protection-> Remove hook and administrator-> Enable Windows Defender-> Remove hook.

Chapter 6. Troubleshooting Guide

Chapter 6. Troubleshooting Guide

6.1 Boot Abnormal Q&A

Q1: After pressing the power button to start on, the power indicator is not on
1. Answer A: Check whether the industrial computer is connected correctly, and whether the power socket is charged;
2. Answer B: Check the industrial computer power adapter, plug and unplug the power cord, display data cable and keyboard mouse cable, confirm that the display and host connection is correct;
3. Answer C: Check whether the positive and negative electrodes of the power plug are reversed

Q2: The power indicator is on and the display is not displayed
1. Answer A: Check the display power supply and switch;
2. Answer B: Check whether the display data line is in bad contact;
3. Answer C: If using Display Port or VGA converter, replace other brand converters;
4. Answer D: Observe the keyboard and mouse indicator, if the keyboard indicator, mouse indicator is on, replace the monitor screen.

Q3: After the boot of the motherboard can not self-check success
1. Answer: Press [Del], key to reset CMOS, or clear CMOS.

Q4: The mouse and keyboard cannot be used after the boot
1. Answer A: To see whether the keyboard lock is locked, remove the keyboard lock;
2. Answer B: If not, check whether the connection with the main board and the keyboard and mouse are connected correctly;
3. Answer C: Check whether there is a keyboard mouse one two turn joint, if there is the keyboard, mouse reverse use;
4. Answer D: Replace one joint and two joints;
5. Answer E. Replace the mouse and keyboard.

Q5: Unable cannot boot the system from the hard drive after boot
1. Answer A: Press the "Del" key to enter the CMOS hard disk parameter setting and boot order are correct;
2. Answer B: After using the optical drive or floppy drive boot, check whether the hard disk has a boot system or the hard disk is normal partition and has activated the boot partition;
3. Answer C: Press F8 at startup and select the last correct configuration to start the operating system;
4. Answer D: Replace the new hard drive and reinstall the system.

Q6: The system dies or has a blue screen during operation
1. Answer A: Check whether the industrial computer temperature is too high;
2. Answer B: Check whether the incorrect or expired drivers are installed;
3. Answer C: Check whether the system is infected with the virus;
4. Answer D: Whether the system file or application and disk are damaged.

Q7: Unable to install the device driver correctly
1. Answer A: Check whether the driver is correct and the latest;
2. Answer B: Whether the driver needs the patch support of the operating system;
3. Answer C: Whether the resources occupied by other equipment are in conflict with the resources occupied by the equipment that need to be driven;

4. Answer D: If the peripheral equipment, change a slot and reinstall the drive;
5. Answer E: Replace the equipment and reinstall the driver program.

Q8: BIOS Upgrade method
1. Prepare a UEFI start U disk, if not, you need to make one;
2. Please copy the required refresh BIOS file and batch to the U disk root directory;
3. Press F7, select the made UEFI U disk, return, and enter the Shell;
4. Enter FS0: return (if no other storage devices, fs0:);
5. Run the flash. The nsh, brush BIOS, the middle of no power off;
6. After brushing the BIOS, power off, then power on, restart the industrial computer, enter the BIOS setting, F3 load the BIOS optimization value (Load optimized defaults return car selection Y).

Q9: Precautions The following conditions may lead to a refresh failure and no boot up.
1. Power interruption during the refresh process;
2. Virus exists in the U disk;
3. BIOS files;
4. Non-UEFI system.

If it cannot be started after refresh, you can empty the BIOS and try it. If the situation is still the same, please return to the factory for repair.

Chapter 7. After-Sale Service

Chapter 7. After-Sale Service

Please visit the official website of Darveen (https://www.darveen.com/), Get the latest information on the product.

If users need technical support, please contact the local distributor, seller or the customer service department. Before the technical consultation, please collect the following information:
1. Product model and production serial number (normally, bar code on the body)
2. Software used (operating system, version, application software, etc.)
3. Additional equipment situation of product docking (such as power supply situation, resistance and other basic information)
4. Complete description of the problem (video and photo)
5. Full content of each error message (video recording and photo taking)

Darveen Co., Ltd.
Email: sales@darveen.com
www.darveen.com
Darveen Co., Ltd. All Rights Reserved